DIMENSION TABLE + DIMENSIONAL DRAWING Rotary Valve TYPE SZR - DN 300

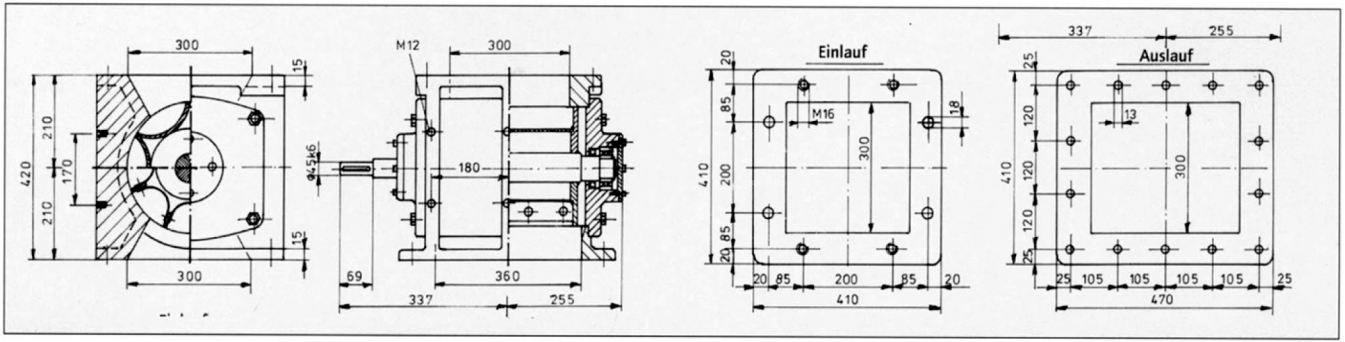

Typ	theoret. displaced vol. 25 rpm (m^3/h)	Displaced volume (l)	Inlet (mm x mm)	Total height (mm)	Total length (mm)	Total width (mm)	Weight (kg)	
							1*	2*
SZR 300/7,4	12	7,4	300 x 300	420	595	410	200	250
SZR 300/11,4	18	11,4	300 x 300	420	595	410	200	250
SZR 300/13	20	13	300 x 300	420	595	410	200	250

[3] theoretical displaced volume at 25 rpm **(m^3/h)** · 1* = weight without gear - 2* = weight with gear